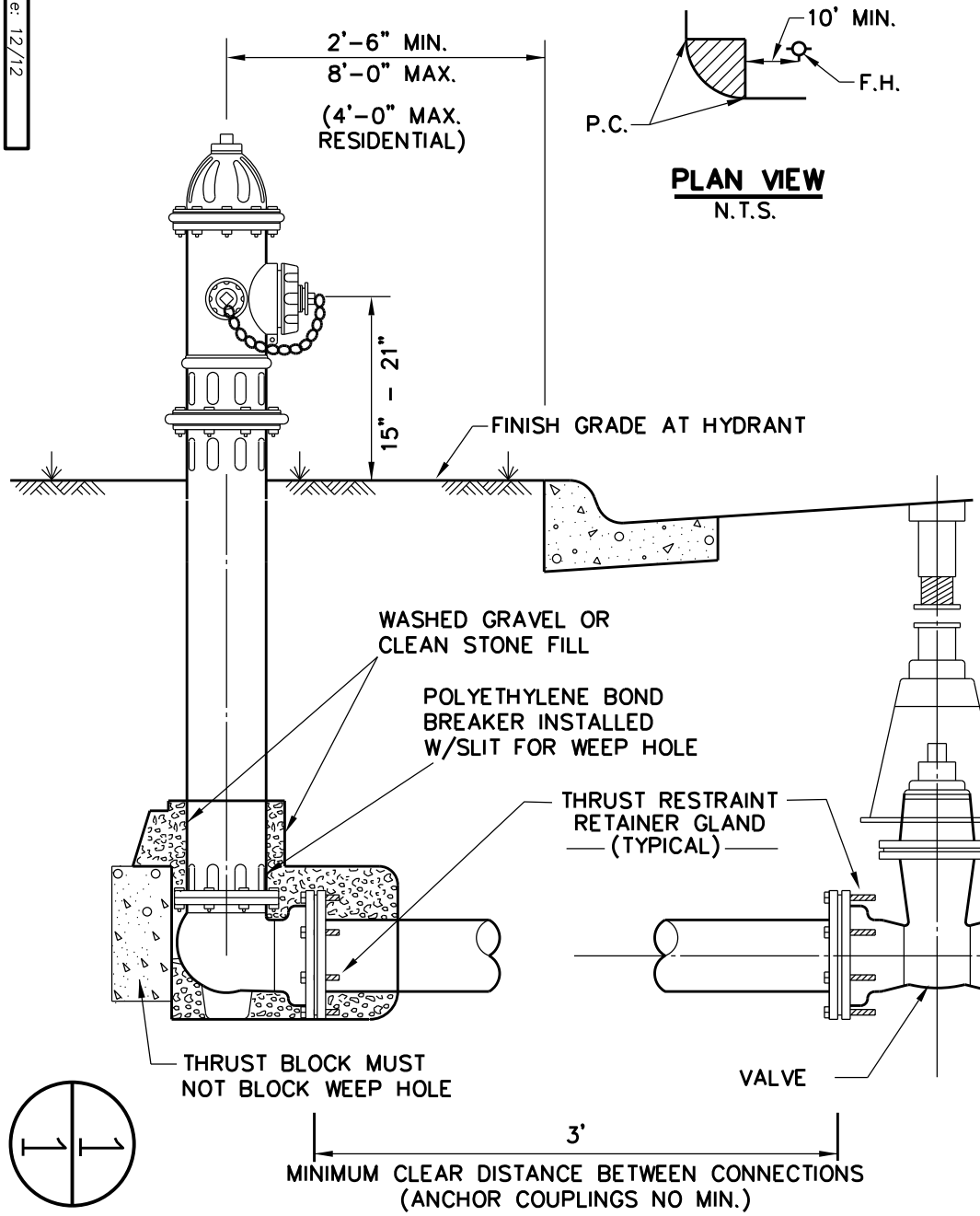

PLAN VIEW
N.T.S.

NOTES:

1. ALL FIRE HYDRANTS SHALL CONFORM TO AWWA STANDARD SPECIFICATIONS FOR FIRE HYDRANTS FOR ORDINARY WATER WORKS SERVICE, C-502. FIRE HYDRANTS SHALL HAVE A 5 1/4" MIN. VALVE OPENING AND A BARREL APPROXIMATELY 7" INSIDE DIAMETER. ALL HYDRANTS SHALL BE EQUIPPED WITH A BREAKAWAY FLANGE.
2. ALL JOINTS SHALL BE MECHANICAL JOINTS WITH THRUST RESTRAINER GLANDS. ALL FITTINGS AND VALVES SHALL BE POLYWRAPPED WITH NO LESS THAN 8 MILS AND SHALL CONFORM TO AWWA. POLYWRAP MUST HAVE A SLIT FOR A WEEP HOLE.
3. TYPICAL VALVE: ACTUAL VALVE LOCATION WILL DEPEND ON LOCATION OF WATER MAIN.
4. F.H. NO CLOSER THAN 18" TO EXISTING OR PROPOSED SIDEWALKS. (USUAL)
5. SET FIRE HYDRANT ON THE LOT LINE EXTENDED WHEN POSSIBLE.
6. F.H. SHALL BE LOCATED MINIMUM 10 FT. OUTSIDE OF THE AREA BETWEEN THE P.C.'S OF THE CORNER TURNING RADII AT INTERSECTIONS. (SEE PLAN VIEW)
7. A BLUE ACRYLIC 2-WAY REFLECTOR TO BE PLACED IN TRAFFIC LANE ADJACENT TO FIRE HYDRANT.
8. ACCEPTABLE FIRE HYDRANTS ARE: MUELLER CENTURION A-423, WATEROUS PACER WB67, KENNEDY GUARDIAN, CLOW MEDALLION, OR FIREFLO MODEL F-06.
9. NEW FIRE HYDRANTS MUST BE WITHIN 12 MONTHS FROM DATE OF MANUFACTURE AT THE TIME OF PROJECT ACCEPTANCE. HYDRANTS OLDER THAN 12 MONTHS MUST BE APPROVED BY THE WATER DEPARTMENT.

Revision Date: 12/12

Scale : N/A Date : 06/01/05
Design :
Drawn : GAV
Dwg. File : FIR_001.DGN
Project No. : STANDARD-DETAILS

GARLAND ENGINEERING

STANDARD DETAILS

FIRE HYDRANT INSTALLATION

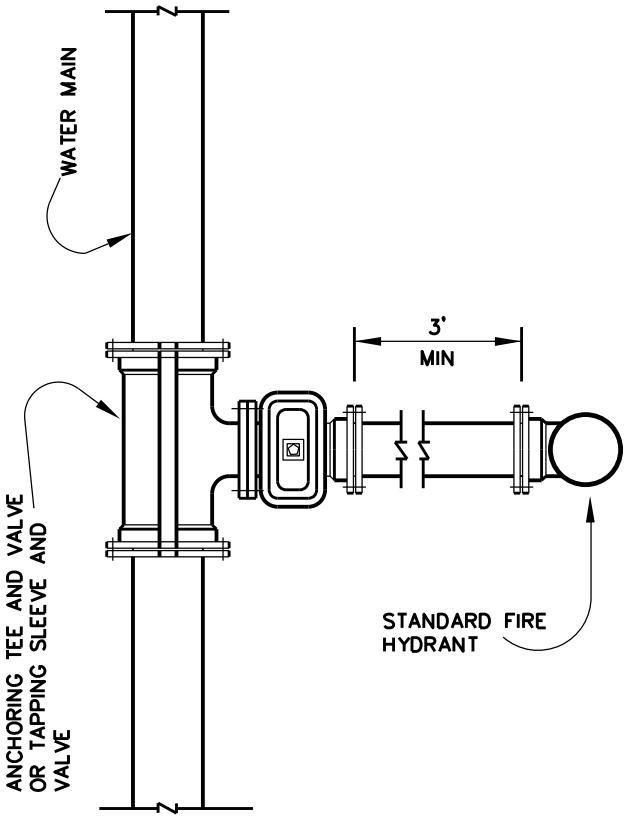

STANDARD INSTALLATION

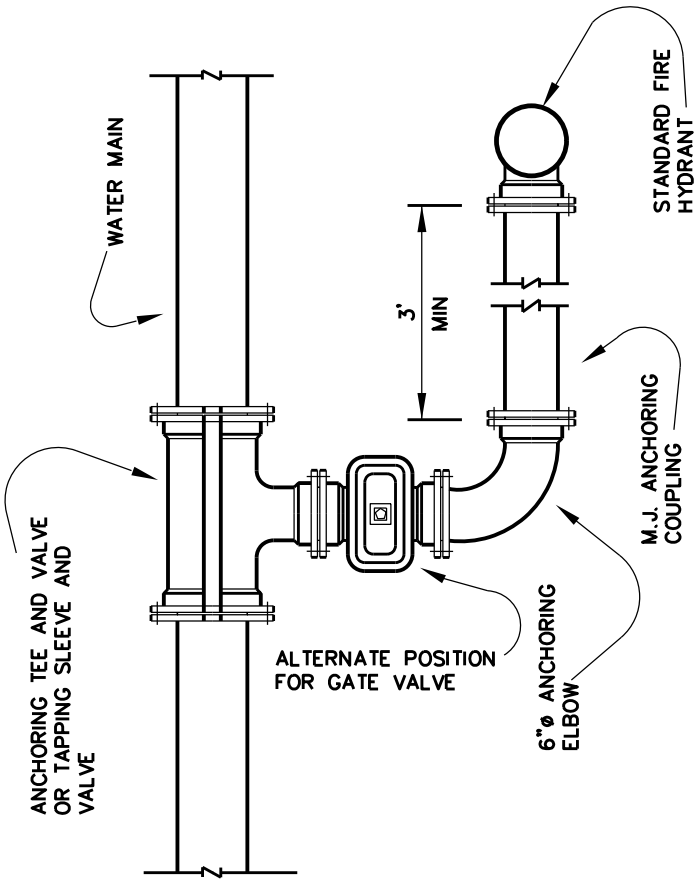

ALTERNATE INSTALLATION

1
4

Revision Date: 07/21/06

Scale : N/A Date : 06/01/05	GARLAND ENGINEERING STANDARD DETAILS	TYPICAL FIRE HYDRANT INSTALLATION	PAGE 2
Design :			
Drawn : JMK			
Dwg. File : FIR_002.DWG			
Project No. : STANDARD-DETAILS			

6"ø STEEL PIPE W/CONCRETE FILL
6' LENGTH (3' ABOVE PAVING, 3' BELOW PAVING) TO BE CASED IN 16"ø PIER TO DEPTH OF 1'-0". BELOW BOTTOM OF PIPE USE 2-#6x12" THRU PIPE INTO CONCRETE PIER. PIPES TO BE PAINTED RED.

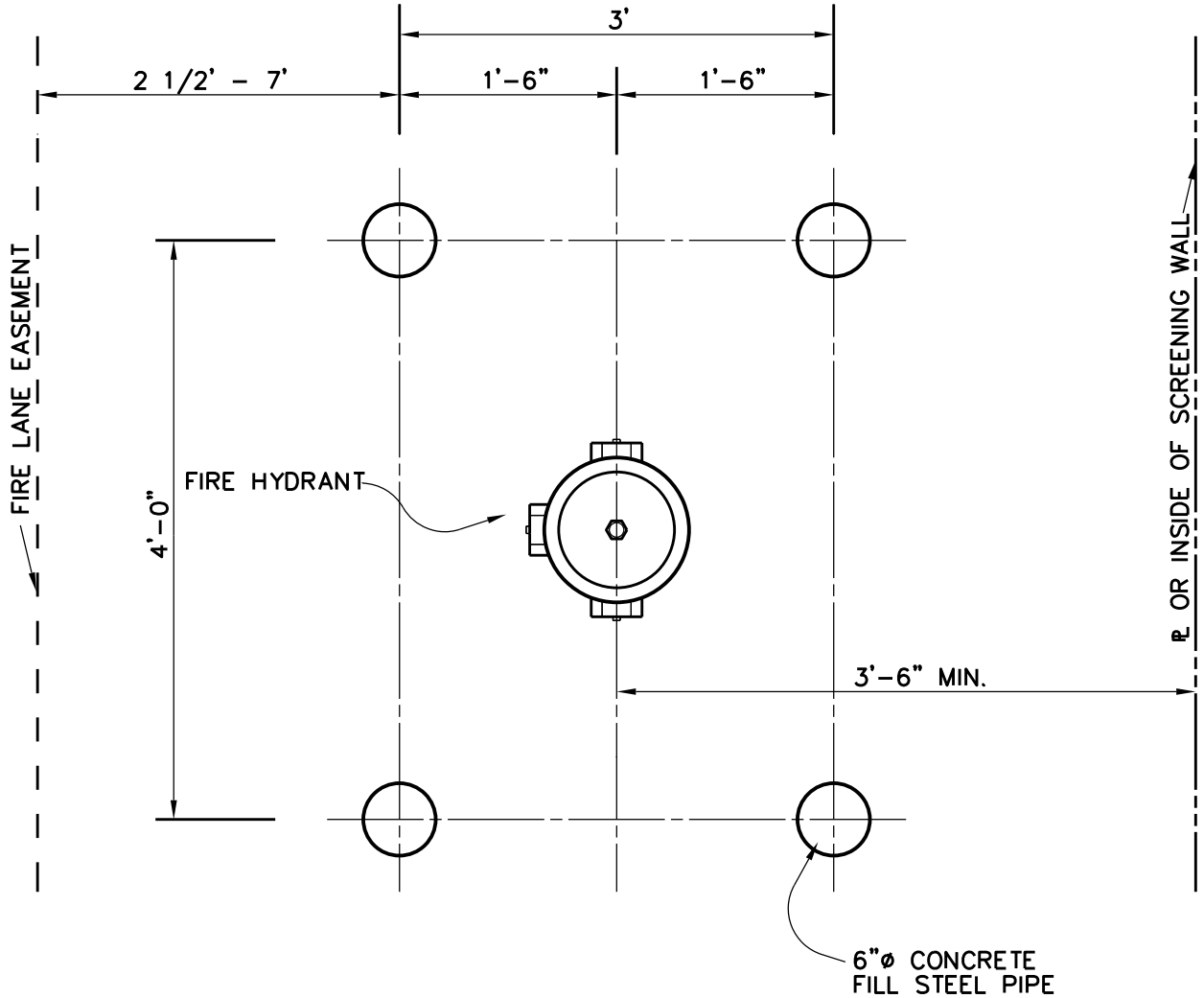

NOTE:
FOR USE ONLY WHERE CURBS ARE NOT POSSIBLE.

FIRE HYDRANT BOLLARD DETAIL

NTS

2/4

Revision Date:			
Scale : N/A Date : 06/01/05	GARLAND ENGINEERING STANDARD DETAILS	FIRE HYDRANT BOLLARD INSTALLATION	PAGE 3
Design :			
Drawn : JMK			
Dwg. File : FIR_003.DWG			
Project No. : STANDARD-DETAILS			

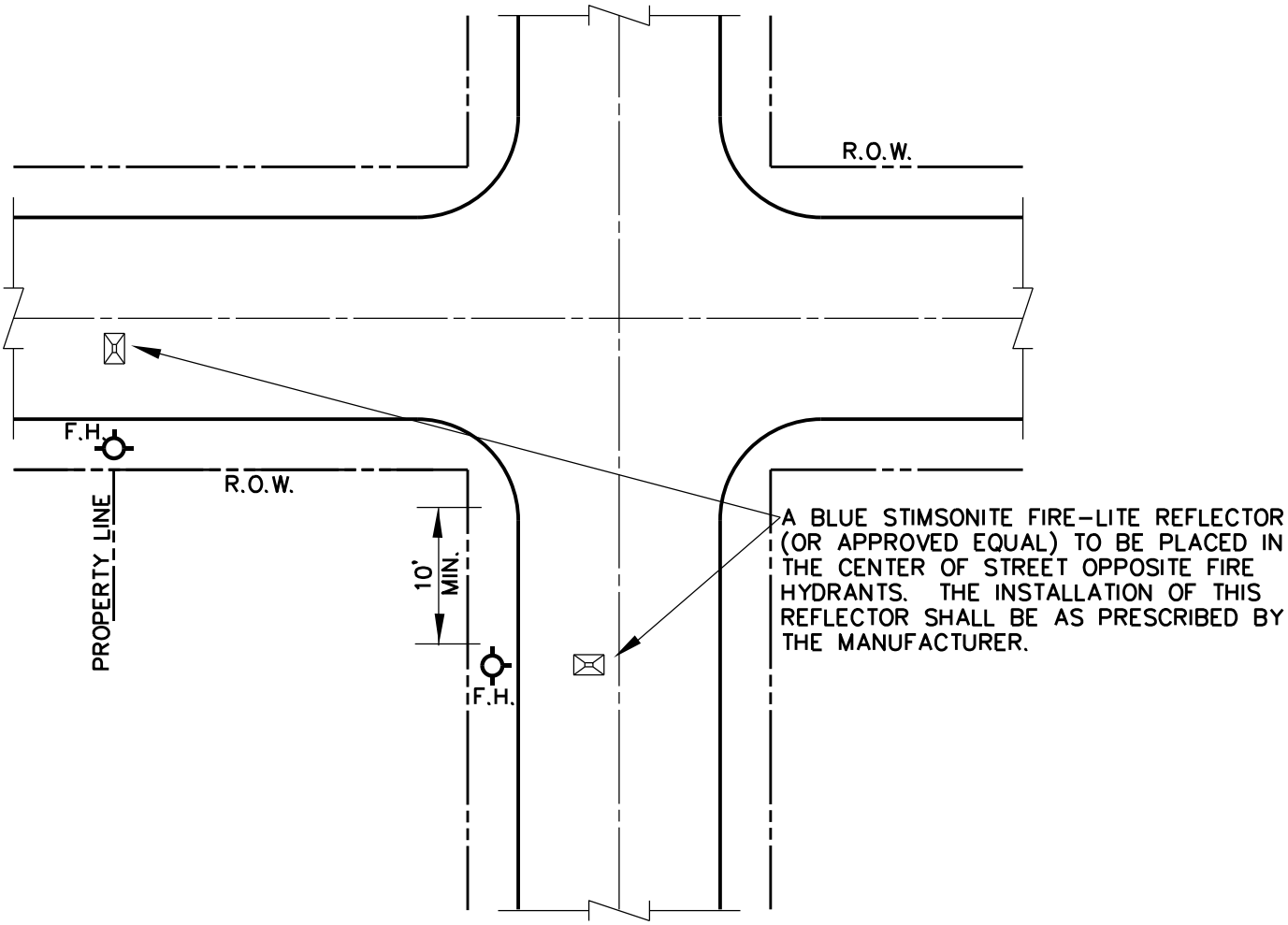

NOTE:

1. DO NOT PLACE FIRE HYDRANT WITHIN CURB RADIUS RETURN.
2. WHERE FIRE HYDRANT IS TO BE LOCATED BETWEEN STREET INTERSECTIONS FIRE HYDRANTS SHALL BE PLACED AT A PROPERTY INTERSECTION (EXTENDED).

TYPICAL FIRE HYDRANT REFLECTOR INSTALLATION

NTS

3/4

Revision Date:			
Scale : N/A Date : 06/01/05	GARLAND ENGINEERING STANDARD DETAILS	FIRE HYDRANT REFLECTOR INSTALLATION	PAGE 4
Design :			
Drawn : JMK			
Dwg. File : FIR_004.DWG			
Project No. : STANDARD-DETAILS			

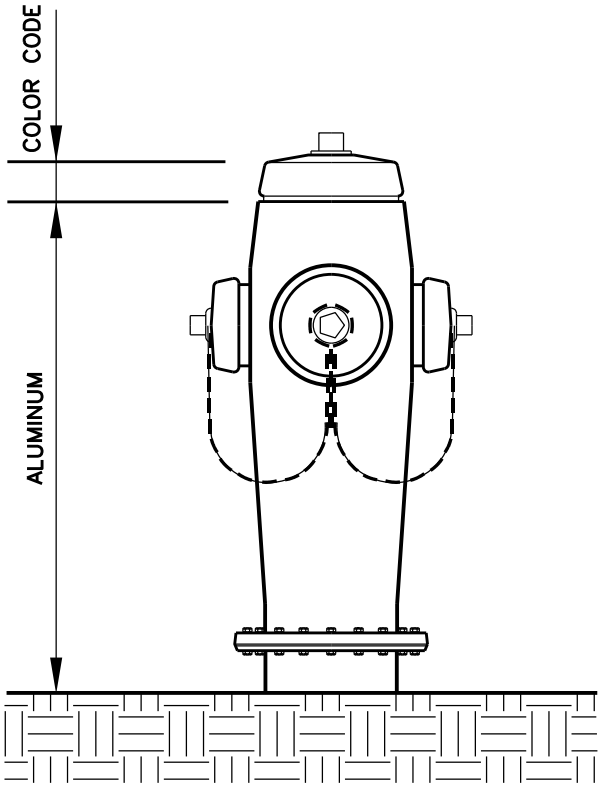

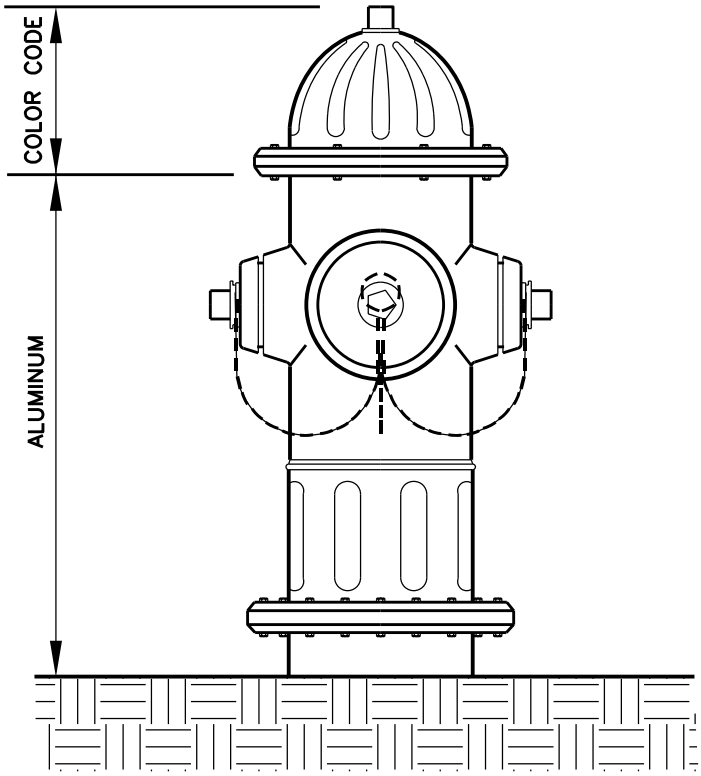

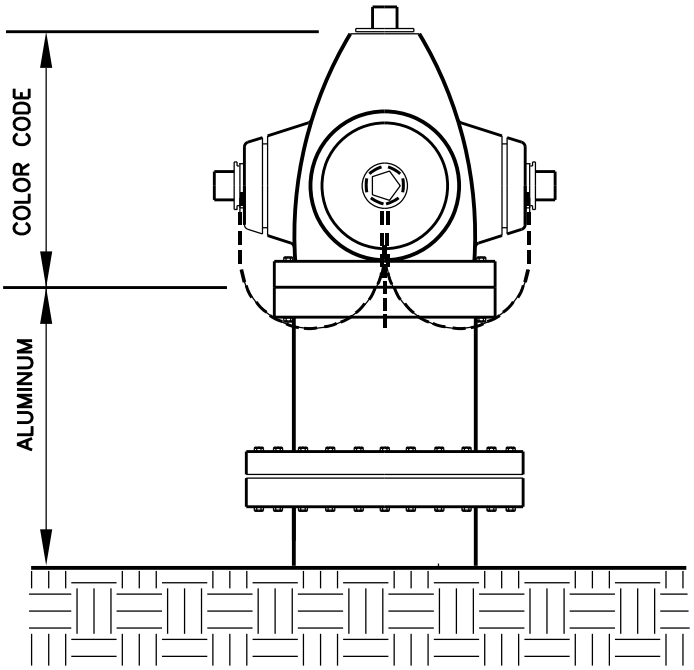

COLOR CODE

6" MAINS
ALUMINUM – GLIDDEN # Y-992

8" WATER MAINS
GLIDDEN ENAMEL, SAFETY BLUE

10" MAIN OR LARGER
GLIDDEN ENAMEL, SAFETY YELLOW

4/4

Revision Date:

Scale : N/A Date : 06/01/05	GARLAND ENGINEERING STANDARD DETAILS	FIRE HYDRANT PAINTING DETAILS
Design :		
Drawn : JMK		
Dwg. File : FIR_005.DWG		
Project No. : STANDARD-DETAILS		